Model No: **IC9525-XX, IC9523-XX, IT6025-XX, IT8023-XX**

SPEC SHEET

PRODUCT DESCRIPTION

- PARKER 73 modular bathroom vanity with rectangular integrated Solid Surface counter tops
- Wall mount cabinets with BLUM mounting hardware
- Cabinet is available in Matte White, Rock gray, Natural Walnut, and Black Elm
- Hardwood plywood construction
- Glass dividers on the top drawer of each modular component
- Soft close and full extension drawers
- Aluminum hardware available in matt black, brushed nickel, polished chrome, and brushed gold finish
- Solid Surface counter top with integrated basin and infinity drains in Matt White or Stone Gray
- Solid Surface flat counter top for makeup drawer
- Solid Surface material is 38% polyester resin and 60% aluminum hydroxide powder
- Basin depth is 4 1/2"
- Light assembly required (connecting screws are included)

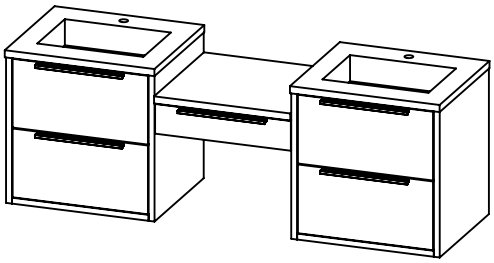

ROUGHING-IN DIMENSIONS

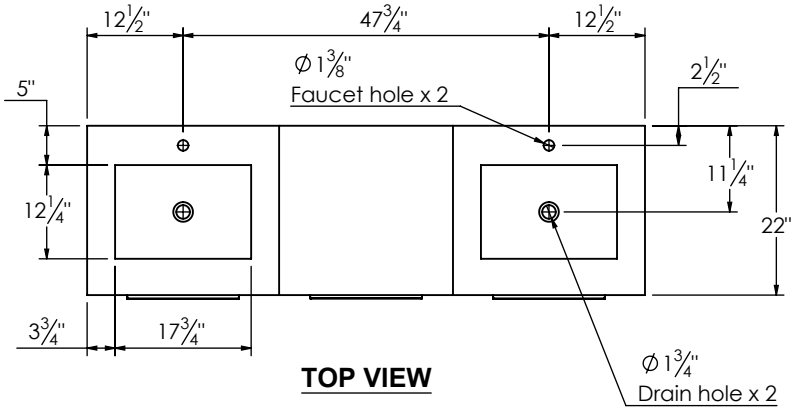

TOP VIEW

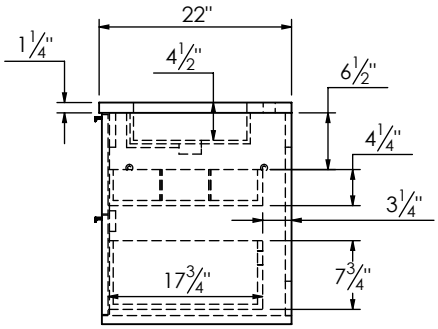

SIDE VIEW

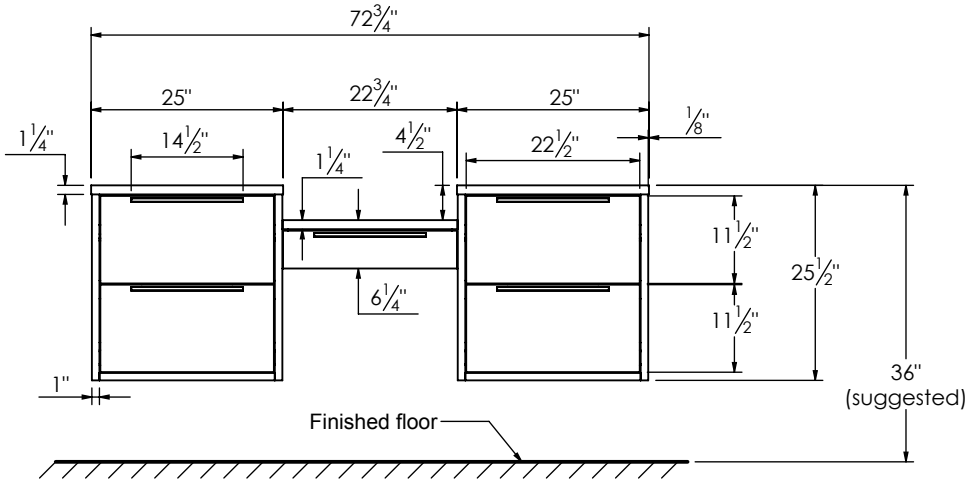

FRONT VIEW

SPEC SHEET

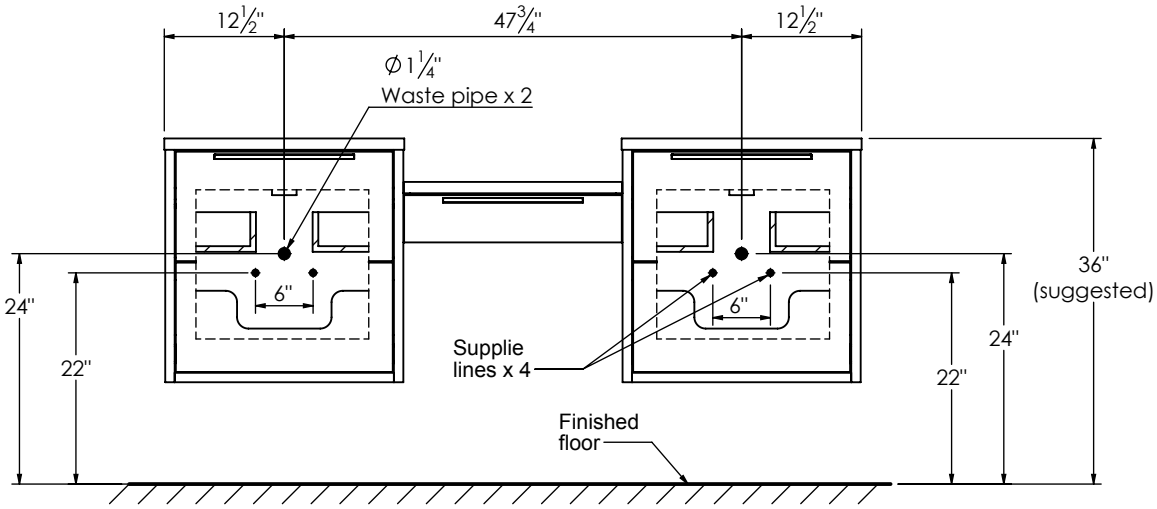

ROUGHING-IN DIMENSIONS