Model No: IC3560S-XX, IT7060S-XX

SPEC SHEET

PRODUCT DESCRIPTION

- Hudson 60 Single freestanding bathroom vanity
- Available in Natural Elm (36), Matte White (50), Rock Gray (52) and Natural Walnut (56) finish
- Cabinet is fully assembled
- Hardwood Plywood construction
- Metal handles available in polished chrome, brushed nickel, matte black, and brushed gold finish.
- Soft close door and (full extension) drawers
- Features 2 glass dividers on each top drawer
- Features 6 fully operational drawers
- Features 1 Internal wood shelf with plumbing cut out
- Solid Surface counter top with integrated basin and infinity drain in Matt White. Also available in stone gray.
- Solid Surface material is 38% polyester resin and 60% aluminum hydroxide powder
- Basin depth is 3 1/2"
- Drain assembly and 10" drain tail included

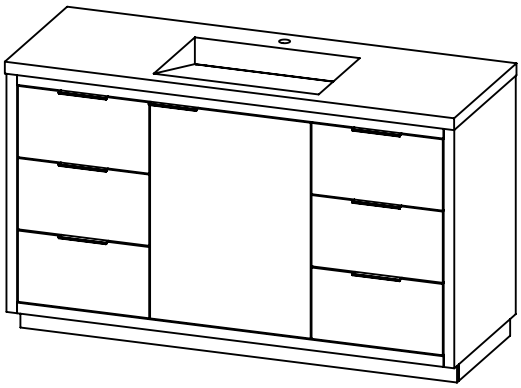

ROUGHING-IN DIMENSIONS

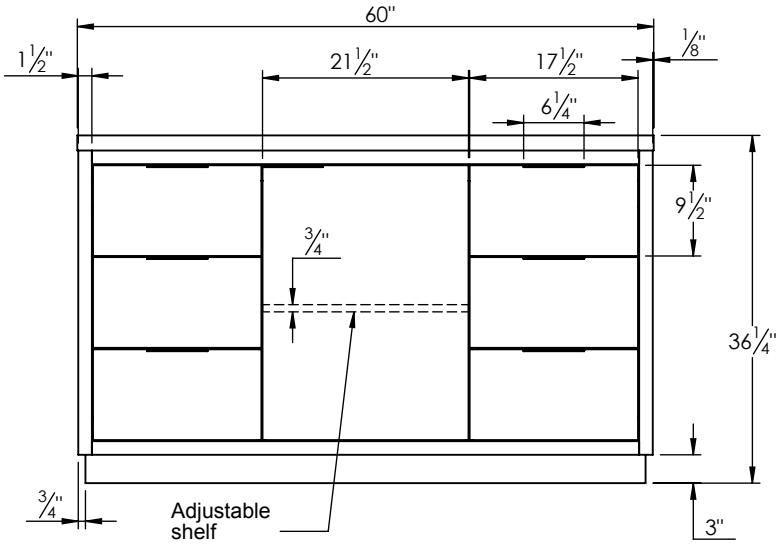

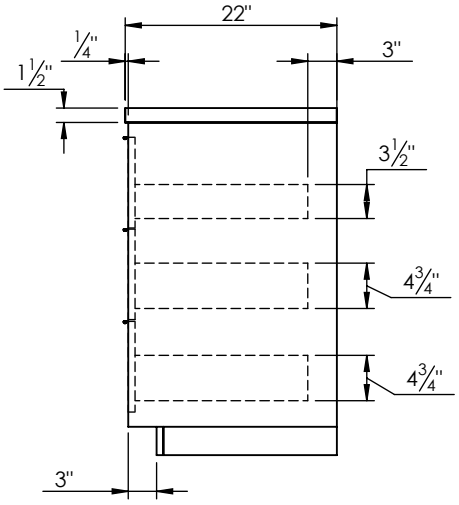

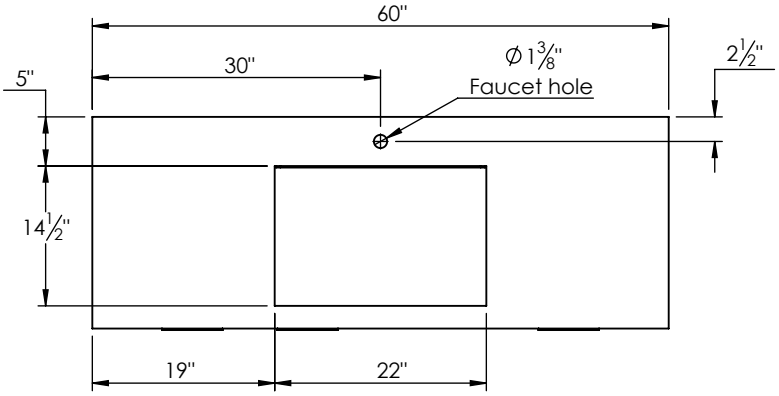

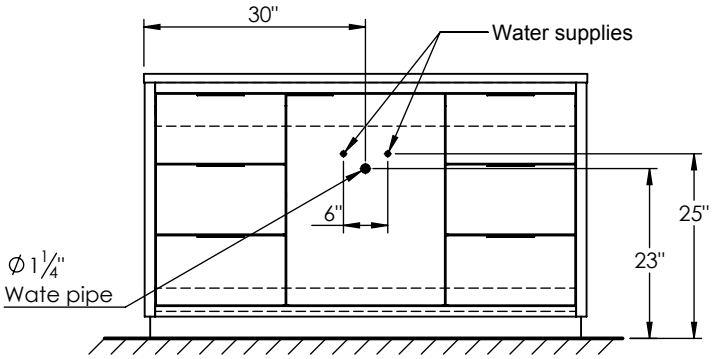

ROUGH PLUMBING