Model No: IC3560D-XX, IT7060D-XX

SPEC SHEET

PRODUCT DESCRIPTION

- Hudson 60 Double bathroom vanity
- Available in Natural Elm (36), Matte White (50), Rock Gray (52) and Natural Walnut (56) finish
- Cabinet is fully assembled
- Hardwood Plywood construction
- Soft close doors and (full extension) drawers
- Features 4 glass dividers on the top drawer
- Removable wood divider on the middle drawer
- Feautures 2 Internal wood shelves with plumbing cut out
- Solid Surface counter top with integrated basins and infinity drains in Matt White. Also available in stone gray.
- Solid Surface material is 38% polyester resin and 40% aluminum hydroxide powder
- Drain assembly and 10" drain tail included
- Basin depth is 3 1/2"

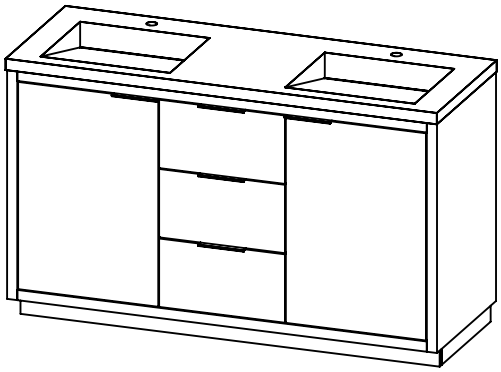

ROUGHING-IN DIMENSIONS

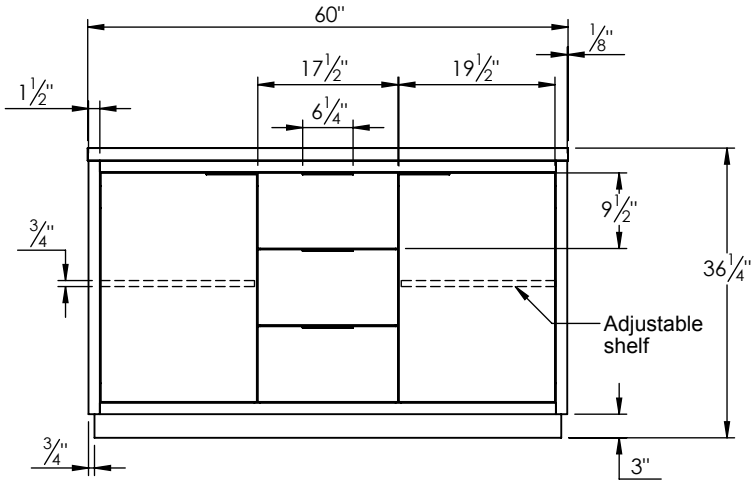

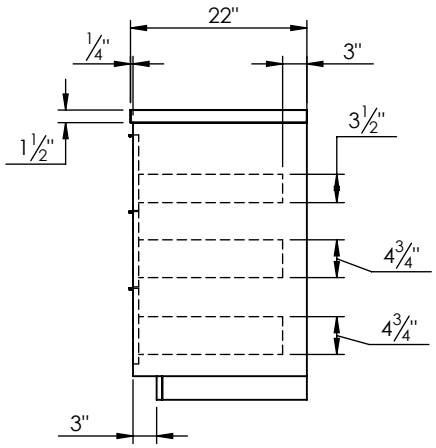

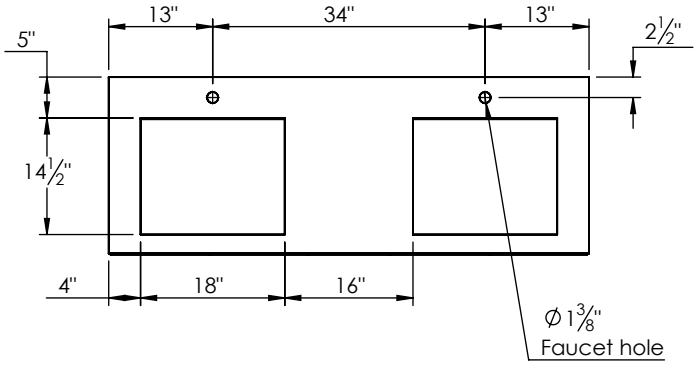

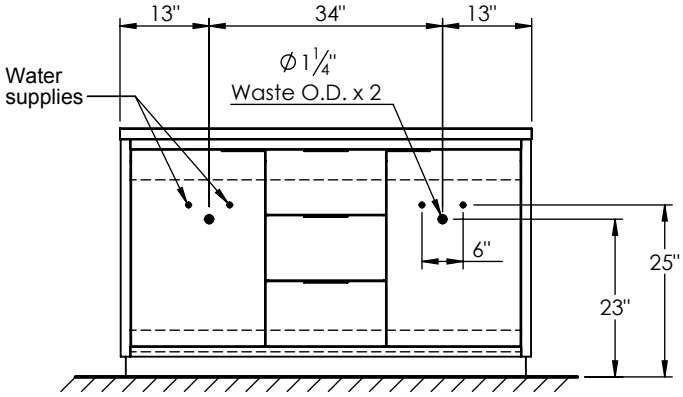

ROUGH PLUMBING