Model No: IC3537-XX, IT2037-XX, IB1008-70

SPEC SHEET

PRODUCT DESCRIPTION

- Hudson 37 Single bathroom vanity
- Available in Natural Elm (36), Matte White (50), Rock Gray (52) and Natural Walnut (56) finish
- Cabinet is fully assembled
- Hardwood Plywood construction
- Soft close door and (full extension) drawers
- Features 2 glass dividers on top drawer
- Feautures 1 Internal wood shelves with plumbing cut out
- Metal handles available in polished chrome, brushed nickel, matte black, and brushed gold
- Includes a quartz stone counter top available in white, calacatta, and concrete gray color
- Back and side splash are optional
- Lotus undermount porcelain basins with square shape in white (with overflow hole)
- Basin depth is 5" (including top thickness)

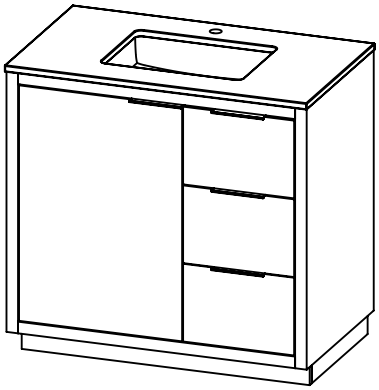

ROUGHING-IN DIMENSIONS

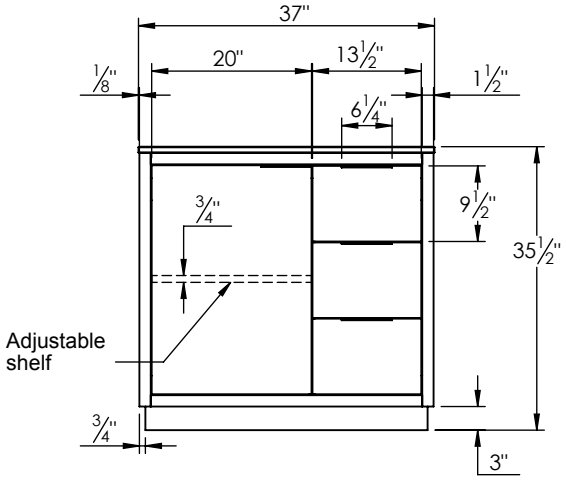

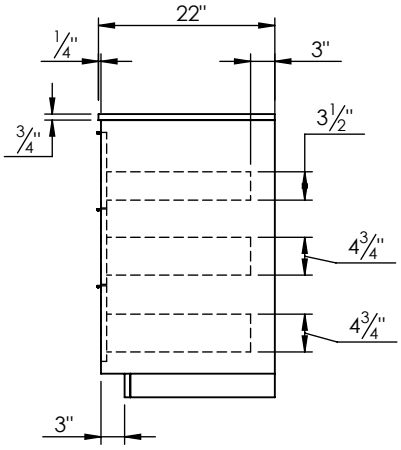

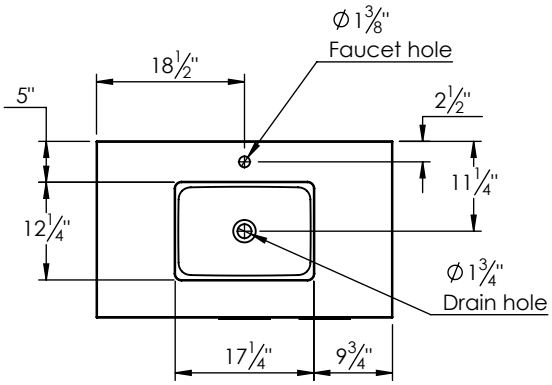

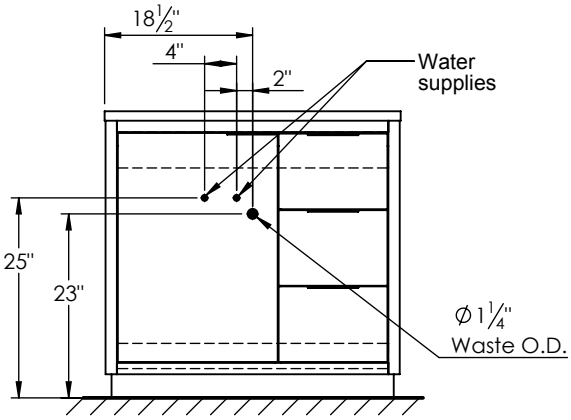

ROUGH PLUMBING